1.8° 42MM High Torque Hybrid Stepping Motor

Item	Specifications
Step Angle	1.8°
Step Angle Accuracy	±5% (full step, no load)
Resistance Accuracy	±10%
Inductance Accuracy	±20%
Temperatru Rise	80°CMax. (rated current,2 phase on)
Ambient Temperatuar	–20°C~+50°C
Insulation Resistance	100M?Min.,500VDC
Dielectric Strength	500VAC/ for one minute
Shaft Radial Play	0.02Max. (450 g–load)
Shaft Axial Play	0.08Max. (450 g–load)
Max. radial force	28N (20mm foom the flange)
Max.axial force	10N

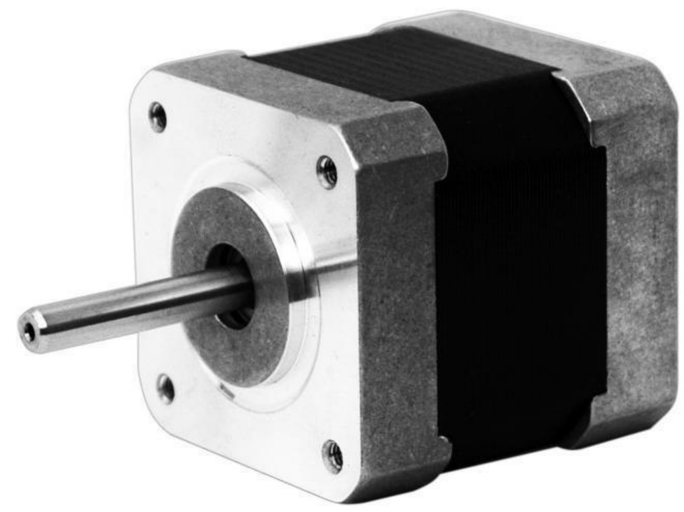

● 42MM Hybrid Stepping Motor Specificatiors

Model No	Rated Voltage	Current /Phase	Resistance /Phase	Inductance /Phase	Holding Torque	# of Leads	Rotor Inertia	Weinght	Detent Torque	Length
XY42STH34-0354A	V	A	Ω	mH	Kg–cm		g–cm²	kg	g–cm	mm
	12	0.35	34	33	1.6	4	35	0.22	120	34

● Dimension

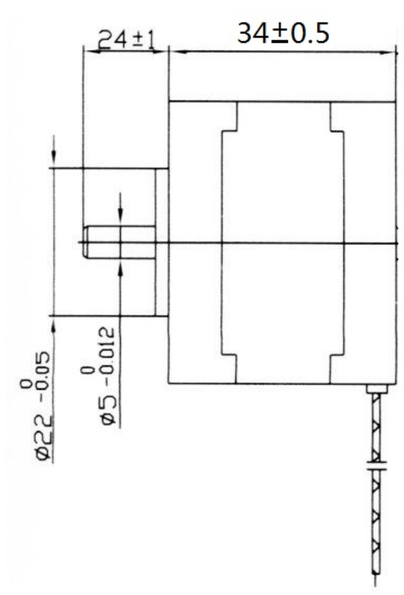

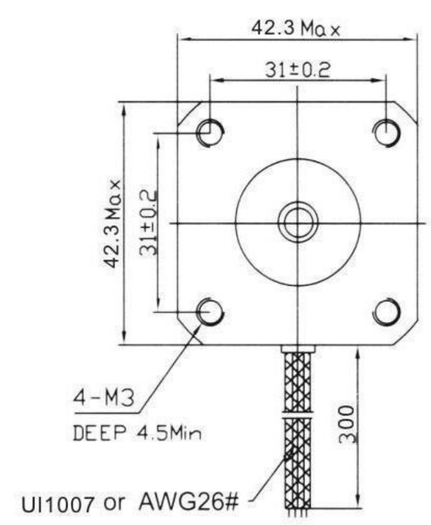

● Wiring Diagram

4 LEADS

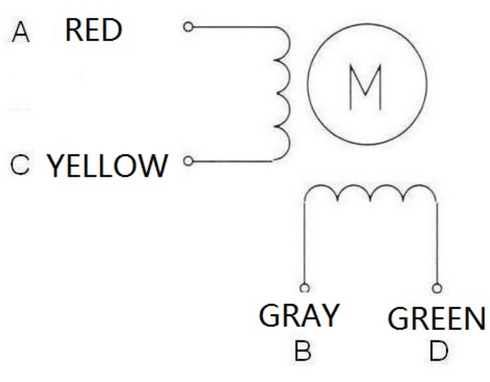
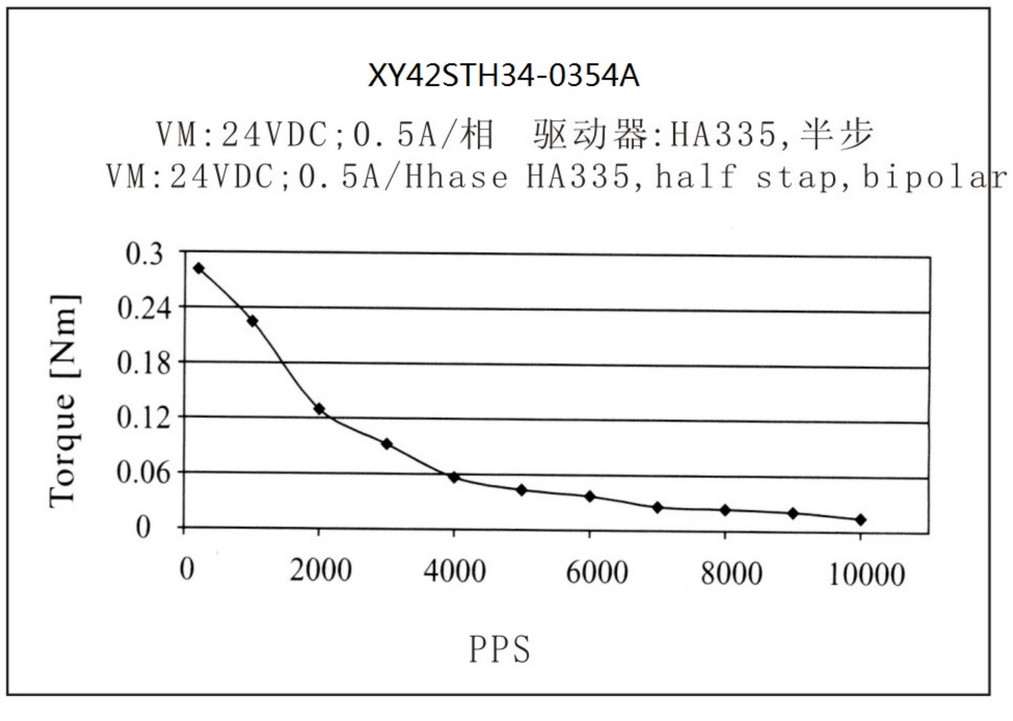
● Pull out Torque Curve